136.0	0005	0019.0	1 of 1	Residential
Map	Block	Lot	CARD	ARLINGTON

	Total Card	/	Total Parcel
APPRAISED:	1,237,800	/	1,237,800
USE VALUE:	1,237,800	/	1,237,800
ASSESSED:	1,237,800	/	1,237,800

PROPERTY LOCATION

No	Alt No	Direction/Street/City
20		KENSINGTON RD, ARLINGTON

OWNERSHIP

Unit #:

Owner 1:	DEZIEL MICHELE M
Owner 2:	
Owner 3:	
Street 1:	20 KENSINGTON RD
Street 2:	
Twn/City:	ARLINGTON
St/Prov:	MA Cntry: Own Occ: Y
Postal:	02476 Type:

PREVIOUS OWNER

Owner 1:	
Owner 2:	
Street 1:	
Twn/City:	
St/Prov:	Cntry:
Postal:	

NARRATIVE DESCRIPTION

This parcel contains 7,150 Sq. Ft. of land mainly classified as One Family with a Colonial Building built about 1922, having primarily Brick Veneer Exterior and 3426 Square Feet, with 1 Unit, 2 Baths, 1 3/4 Bath, 1 HalfBath, 9 Rooms, and 5 Bdrms.

OTHER ASSESSMENTS

Code	Descrip/No	Amount	Com. Int

PROPERTY FACTORS

Item	Code	Description	%	Item	Code	Description
Z	R1	SINGLE FA	100	water		
o				Sewer		
n				Electri		
Census:				Exmpt		
Flood Haz:						
D				Topo	1	Level
s				Street		
t				Gas:		

IN PROCESS APPRAISAL SUMMARY

Use Code	Land Size	Building Value	Yard Items	Land Value	Total Value
101	7150.000	655,200	11,600	571,000	1,237,800
Total Card	0.164	655,200	11,600	571,000	1,237,800
Total Parcel	0.164	655,200	11,600	571,000	1,237,800

Source: Market Adj Cost | Total Value per SQ unit /Card: 361.30 | /Parcel: 361.3

Legal Description

Entered Lot Size	
Total Land:	
Land Unit Type:	

User Acct	87818
GIS Ref	
GIS Ref	
Insp Date	01/26/18

Patriot Properties Inc.

PREVIOUS ASSESSMENT

Parcel ID 136.0-0005-0019.0

!10602!

Tax Yr	Use	Cat	Bldg Value	Yrd Items	Land Size	Land Value	Total Value	Asses'd Value	Notes	Date
2020	101	FV	654,900	11600	7,150.	571,100	1,237,600	1,237,600	Year End Roll	12/18/2019
2019	101	FV	486,500	11600	7,150.	602,800	1,100,900	1,100,900	Year End Roll	1/3/2019
2018	101	FV	486,500	11600	7,150.	444,200	942,300	942,300	Year End Roll	12/20/2017
2017	101	FV	486,500	11600	7,150.	425,100	923,200	923,200	Year End Roll	1/3/2017
2016	101	FV	486,500	11600	7,150.	393,400	891,500	891,500	Year End	1/4/2016
2015	101	FV	474,800	11600	7,150.	329,900	816,300	816,300	Year End Roll	12/11/2014
2014	101	FV	474,800	11600	7,150.	322,300	808,700	808,700	Year End Roll	12/16/2013
2013	101	FV	474,800	11600	7,150.	307,100	793,500	793,500		12/13/2012

PRINT

Date	Time
12/11/20	00:53:33

LAST REV

Date	Time
07/23/19	11:12:39
danam	

USER DEFINED

Prior Id # 1:	87818
Prior Id # 2:	
Prior Id # 3:	
Prior Id # 1:	
Prior Id # 2:	
Prior Id # 3:	
Prior Id # 1:	
Prior Id # 2:	
Prior Id # 3:	
ASR Map:	
Fact Dist:	
Reval Dist:	
Year:	
LandReason:	
BldReason:	
CivilDistrict:	
Ratio:	

SALES INFORMATION

TAX DISTRICT

PAT ACCT. 10602

Grantor	Legal Ref	Type	Date	Sale Code	Sale Price	V	Tst	Verif	Notes
WINDER DURA M/E	24125-332		1/3/1994		425,500	No	No		Y

BUILDING PERMITS

Date	Number	Descrip	Amount	C/O	Last Visit	Fed Code	F. Descrip	Comment
3/5/2019	299	Alterati	1,000	C				
3/25/2004	194	Redo Bat	20,000	C				re-do 2 bathrooms
9/8/1998	642	Wood Dec	8,000	C				6X26 14X16 WDKS
2/22/1995	76		18,000	C				REMODEL KITCHEN +B

ACTIVITY INFORMATION

Date	Result	By	Name
1/26/2018	Inspected	PH	Patrick H
8/9/2017	Left Notice	HS	Hanne S
3/16/2009	Inspected	345	PATRIOT
2/10/2009	Measured	372	PATRIOT
11/4/1999	Meas/Inspect	266	PATRIOT
10/1/1991		PM	Peter M

Sign: VERIFICATION OF VISIT NOT DATA ___/___/___

LAND SECTION (First 7 lines only)

Use Code	Description	LUC Fact	No of Units	Depth / PriceUnits	Unit Type	Land Type	LT Factor	Base Value	Unit Price	Adj	Neigh	Neigh Influ	Neigh Mod	Infl 1	%	Infl 2	%	Infl 3	%	Appraised Value	Alt Class	%	Spec Land	J Code	Fact	Use Value	Notes
101	One Family		7150		Sq. Ft.	Site		0	90.	0.89	10									571,048						571,000	

Total AC/HA:	0.16414	Total SF/SM:	7150	Parcel LUC:	101	One Family	Prime NB Desc:	ARLINGTON	Total:	571,048	Spl Credit		Total:	571,000

EXTERIOR INFORMATION

Type:	6 - Colonial		
Sty Ht:	2A - 2 Sty +Attic		
(Liv) Units:	1	Total:	1
Foundation:	3 - BrickorStone		
Frame:	1 - Wood		
Prime Wall:	8 - Brick Veneer		
Sec Wall:	2 - Clapboard	25	%
Roof Struct:	2 - Hip		
Roof Cover:	2 - Slate		
Color:	RED & GREEN		
View / Desir:			

GENERAL INFORMATION

Grade:	B - Good		
Year Blt:	1922	Eff Yr Blt:	
Alt LUC:		Alt %:	
Jurisdict:		Fact:	.
Const Mod:			
Lump Sum Adj:			

INTERIOR INFORMATION

Avg Ht/FL:	STD		
Prim Int Wall	2 - Plaster		
Sec Int Wall:			%
Partition:	T - Typical		
Prim Floors:	3 - Hardwood		
Sec Floors:	6 - Ceramic Tile	20	%
Bsmnt Flr:	4 - Carpet		
Subfloor:			
Bsmnt Gar:			
Electric:	3 - Typical		
Insulation:	2 - Typical		
Int vs Ext:	S		
Heat Fuel:	2 - Gas		
Heat Type:	3 - Forced H/W		
# Heat Sys:	1		
% Heated:	100	% AC:	
Solar HW:	NO	Central Vac:	NO
% Com Wall		% Sprinkled:	

BATH FEATURES

Full Bath	2	Rating:	Very Good
A Bath:		Rating:	
3/4 Bath:	1	Rating:	Very Good
A 3QBth		Rating:	
1/2 Bath:	1	Rating:	Good
A HBth:		Rating:	
OthrFix:	2	Rating:	Good

OTHER FEATURES

Kits:	1	Rating:	Very Good
A Kits:		Rating:	
Frpl:	1	Rating:	Good
WSFlue:		Rating:	

CONDO INFORMATION

Location:	
Total Units:	
Floor:	
% Own:	
Name:	

DEPRECIATION

Phys Cond:	GD - Good	18.	%
Functional:			%
Economic:			%
Special:			%
Override:			%
	Total:	18.6	%

CALC SUMMARY

Basic $ / SQ:	125.00
Size Adj.:	1.03546250
Const Adj.:	1.07647133
Adj $ / SQ:	139.331
Other Features:	135650
Grade Factor:	1.33
NBHD Inf:	1.00000000
NBHD Mod:	
LUC Factor:	1.00
Adj Total:	804964
Depreciation:	149723
Depreciated Total:	655241

COMMENTS

2ND SINK IN MASTER BATH WET BAR SINK IN BSMT.

RESIDENTIAL GRID

1st Res Grid	Desc:	Line 1	# Units:	1

Level	FY	LR	DR	D	K	FR	RR	BR	FB	HB	L	O
Other												
Upper												
Lvl 2												
Lvl 1												
Lower												
Totals	RMs:	9	BRs:	5	Baths:	2	HB	1				

REMODELING

Exterior:	
Interior:	
Additions:	
Kitchen:	
Baths:	2004
Plumbing:	
Electric:	
Heating:	
General:	

RES BREAKDOWN

No Unit	RMS	BRS	FL
1	9	5	M
Totals			
1	9	5	

SKETCH

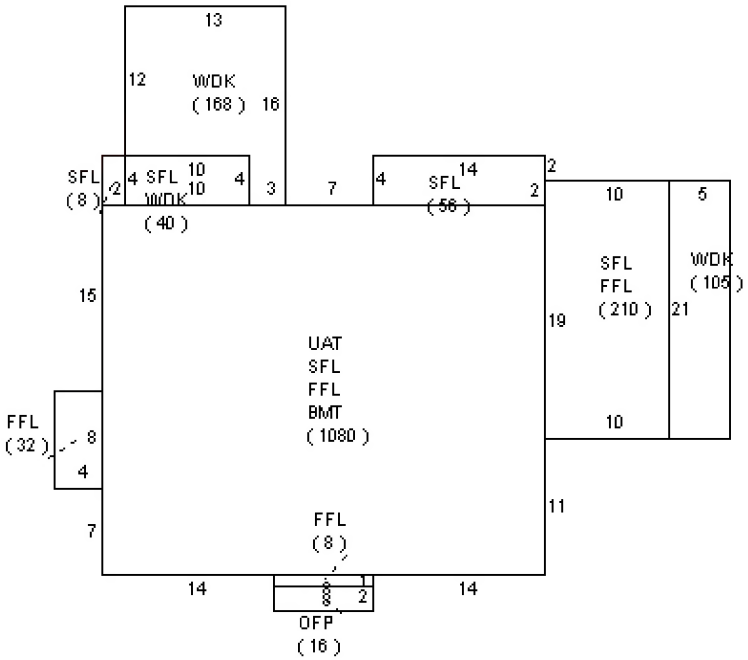

SUB AREA

Code	Description	Area - SQ	Rate - AV	Undepr Value
SFL	Second Floor	1,394	139.330	194,227
FFL	First Floor	1,330	139.330	185,310
BMT	Basement	1,080	55.430	59,860
WDK	Deck	313	9.900	3,098
UAT	Upper Attic	270	97.530	26,334
OFP	Open Porch	16	47.360	758

Net Sketched Area:	4,403			Total:	469,587
Size Ad	2724	Gross Are	5213	FinArea	3426

SUB AREA DETAIL

Sub Area	% Usbl	Descrip	% Type	Qu	# Ten
BMT	100	RRM	40	G	
UAT	100	FLA	100	C	

COMPARABLE SALES

Rate	Parcel ID	Typ	Date	Sale Price

WtAv$/SQ:		AvRate:	Ind.Val

Juris. Factor:		Before Depr:	185.31
Special Features:	0	Val/Su Net:	148.81
Final Total:	655200	Val/Su SzAd	240.53

IMAGE

AssessPro Patriot Properties, Inc

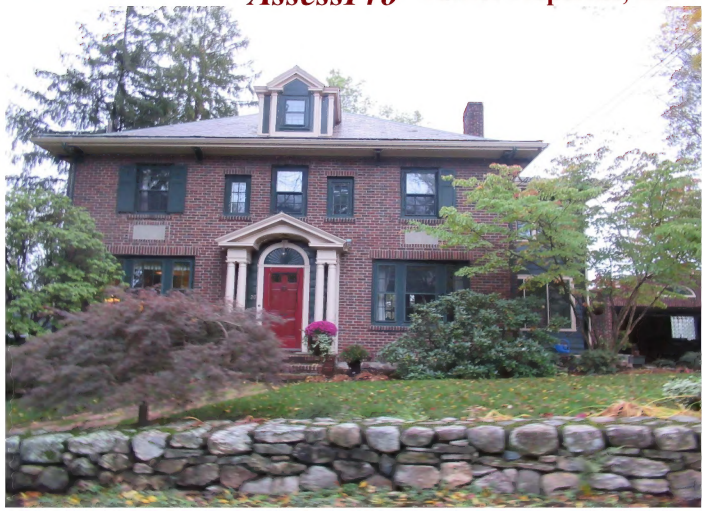

MOBILE HOME

Make:		Model:		Serial #:		Year:		Color:	

SPEC FEATURES/YARD ITEMS

PARCEL ID 136.0-0005-0019.0

Code	Description	A	Y/S	Qty	Size/Dim	Qual	Con	Year	Unit Price	D/S	Dep	LUC	Fact	NB Fa	Appr Value	JCod	JFact	Juris. Value
3	Garage	D	Y	1	24X30	G	GD	1922	23.09	T	30	101			11,600			11,600

More:	N	Total Yard Items:	11,600	Total Special Featues:	Total: 11,600